TG320240D/D1 Graphic 320x240 dots

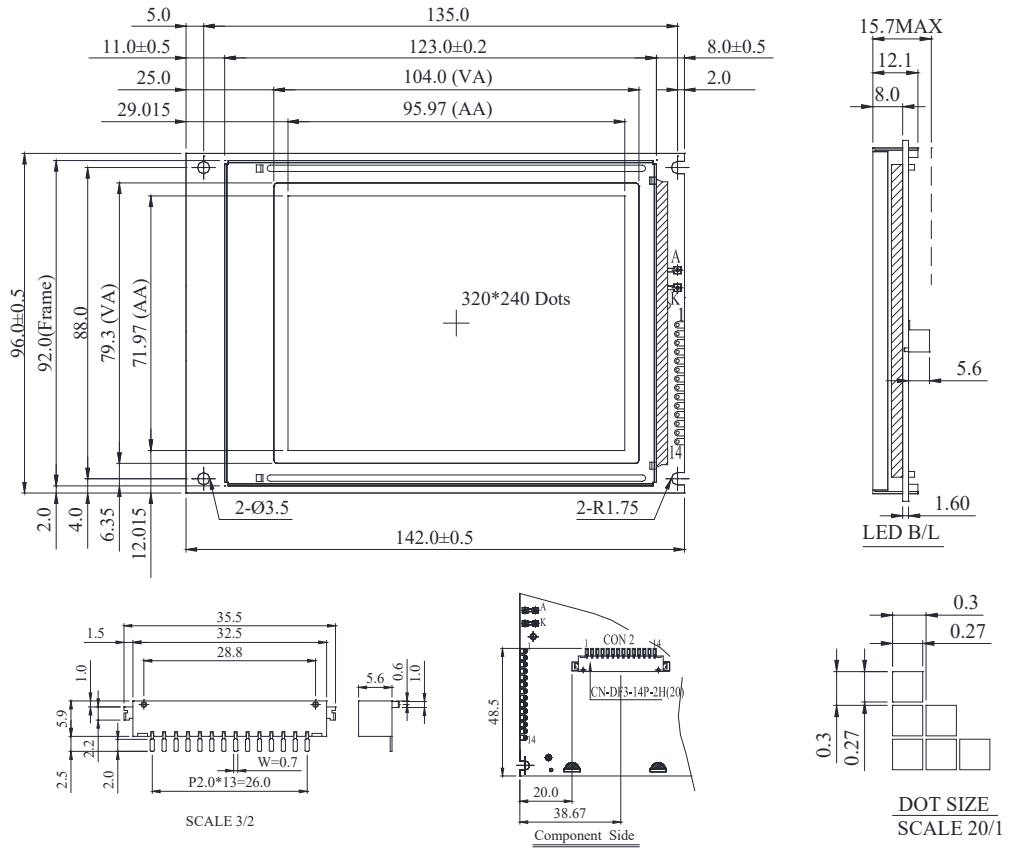

Feature

1.320X240 dots
2.No controller
3.1/240 duty cycle
4.5V power supply
5.Touch screen option

Pin No.	Symbol	Description
1	FRAME	Scan start-up signal
2	DF	Frame reverse signal(alternate signal)
3	LOAD	Data latch pulse
4	CP	Data shift pulse
5	DISPOFF	Display off H:ON L:OFF
6	D0	Data bus line
7	D1	Data bus line
8	D2	Data bus line
9	D3	Data bus line
10	V_{DD}	Power supply for logic
11	V_{SS}	Ground
12	V_{EE}	Negative Voltage Output
13	V_O	Contrast Adjustment
14	FG	Frame ground

Mechanical Data

Item	Standard Value	Unit
Module Dimension	142.0 x 96.0	mm
Viewing Area	104.0 x 79.3	mm
Mounting Hole	135.0 x 88.0	mm
Dot Pitch	0.30 x 0.30	mm
Dot Size	0.27 x 0.27	mm

Electrical Characteristics

Item	Symbol	Standard Value typ.	Unit
Input Voltage	VDD	5.0	V
Recommended LCD Driving Voltage for Normal Temp. Version module @25ºC	VDD-VO	21.6	V

大成通商株式会社
〒105-0004
東京都港区新橋2-19-2リブロ新橋6階
info@taiseitsusho.co.jp