TG12864K Graphic 128x64 dots

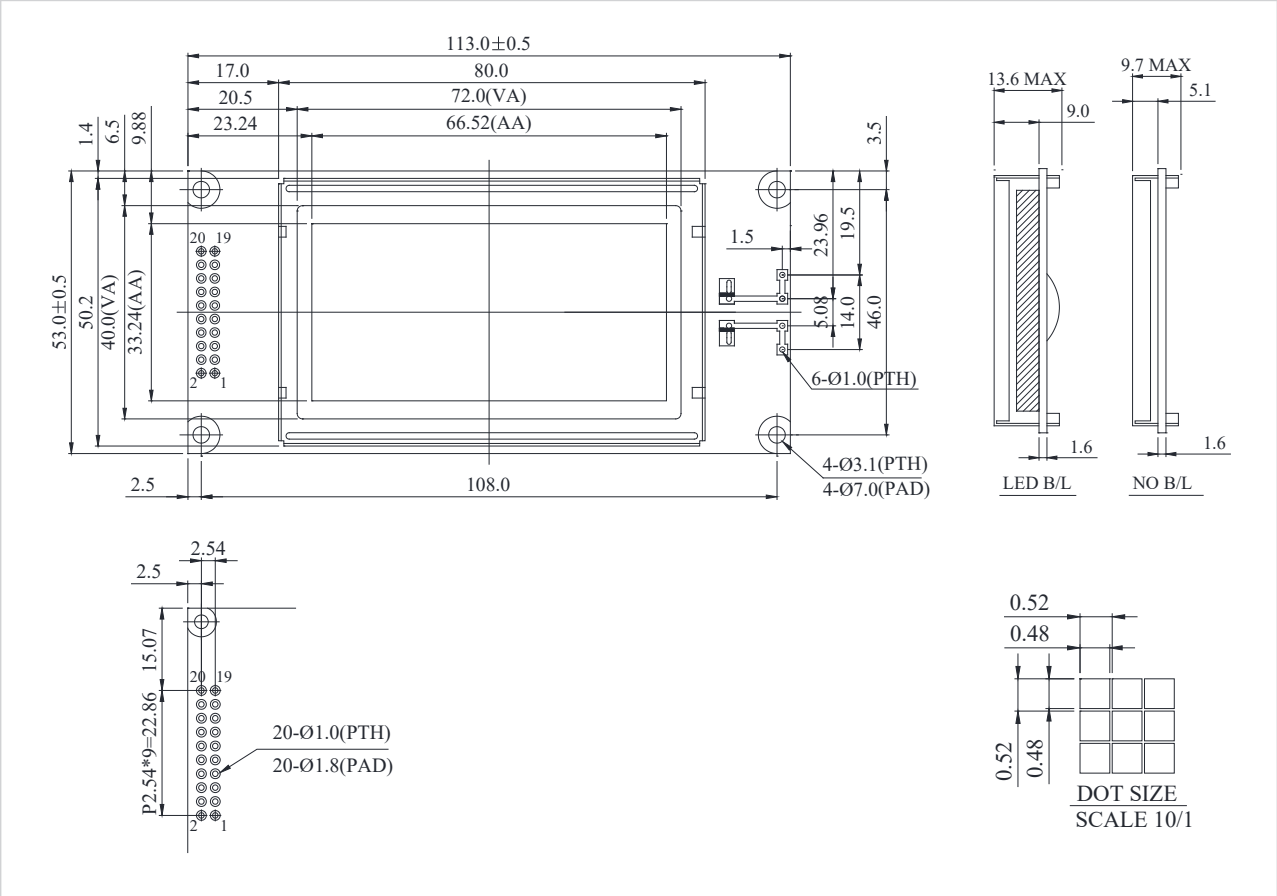

Feature

1. Built-in controller (NT7108 or equivalent)
2. 5V power supply
3. 1/64 duty cycle
4. N.V. Built-in

Pin No.	Symbol	Description
1	V_{SS}	Ground
2	V_{DD}	Power supply for logic
3	V_O	Contrast Adjustment
4	D/I	Data/ Instruction select signal
5	R/W	Read/Write select signal
6	E	Enable signal
7	DB0	Data bus line
8	DB1	Data bus line
9	DB2	Data bus line
10	DB3	Data bus line
11	DB4	Data bus line
12	DB5	Data bus line
13	DB6	Data bus line
14	DB7	Data bus line
15	CS1	Select Column 1~ Column 64
16	CS2	Select Column 65~ Column 128
17	/RES	Controller reset signal, Active Low
18	V_{EE}	Negative Voltage Output
19	A	Power supply for B/L +
20	K	Power supply for B/L -

Mechanical Data

Item	Standard Value	Unit
Module Dimension	113.0 x 53.0	mm
Viewing Area	72.0 x 40.0	mm
Mounting Hole	88.0 x 65.0	mm
Dot Pitch	0.52 x 0.52	mm
Dot Size	0.48 x 0.48	mm

Electrical Characteristics

Item	Symbol	Standard Value typ.	Unit
Input Voltage	VDD	5.0	V
Recommended LCD Driving Voltage for Normal Temp. Version module @25ºC	VDD-VO	8.75	V

大成通商株式会社

〒105-0004
東京都港区新橋2-19-2リプロ新橋6階

info@taiseitsusho.co.jp