TH1602W Character 16x2

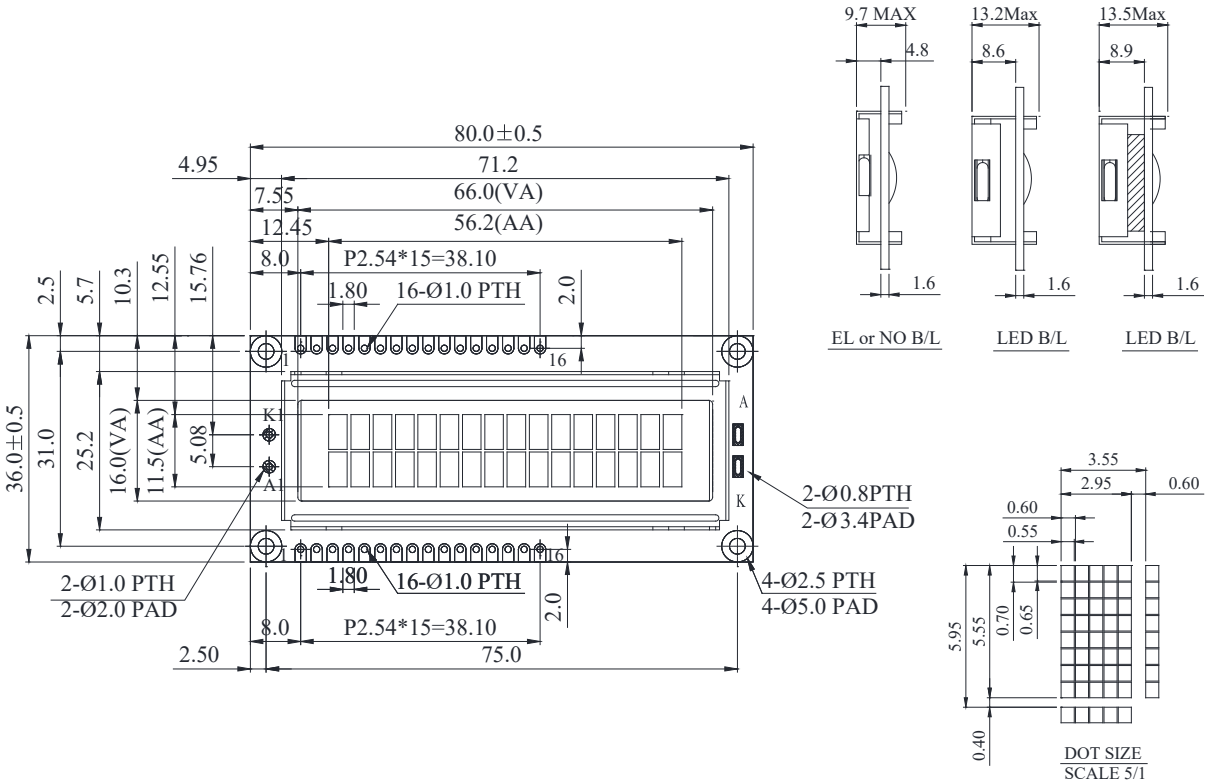

Feature

1.5x8 dots includes cursor
2.Bulit-in controller (ST7066 or Equivalent)
3.5V power supply (Also available for 3V)
4.N.V, optional for 3V power supply
5.1/16 duty cycle
6.LED can be driven by PIN1, PIN2, PIN15, PIN16 or A and K
7.Interface : 6800, option SPI/I2C (RW1063 IC)

Pin No.	Symbol	Description
1	V_{SS}	Ground
2	V_{DD}	Power supply for logic
3	V_O	Contrast Adjustment
4	RS	Data/ Instruction select signal
5	R/W	Read/Write select signal
6	E	Enable signal
7	DB0	Data bus line
8	DB1	Data bus line
9	DB2	Data bus line
10	DB3	Data bus line
11	DB4	Data bus line
12	DB5	Data bus line
13	DB6	Data bus line
14	DB7	Data bus line
15	A	Power supply for B/L +
16	K	Power supply for B/L -

Mechanical Data

Item	Standard Value	Unit
Module Dimension	80.0 x 36.0	mm
Viewing Area	66.0 x 16.0	mm
Mounting Hole	75.0 x 31.0	mm
Character Size	2.95 x 5.55	mm

Electrical Characteristics

Item	Symbol	Standard Value typ.	Unit
Input Voltage	VDD	3/5	V
Recommended LCD Driving Voltage for Normal Temp. Version module @25ºC	VDD-VO	3.70	V

大成通商株式会社
〒105-0004
東京都港区新橋2-19-2リプロ新橋6階
info@taiseitsusho.co.jp